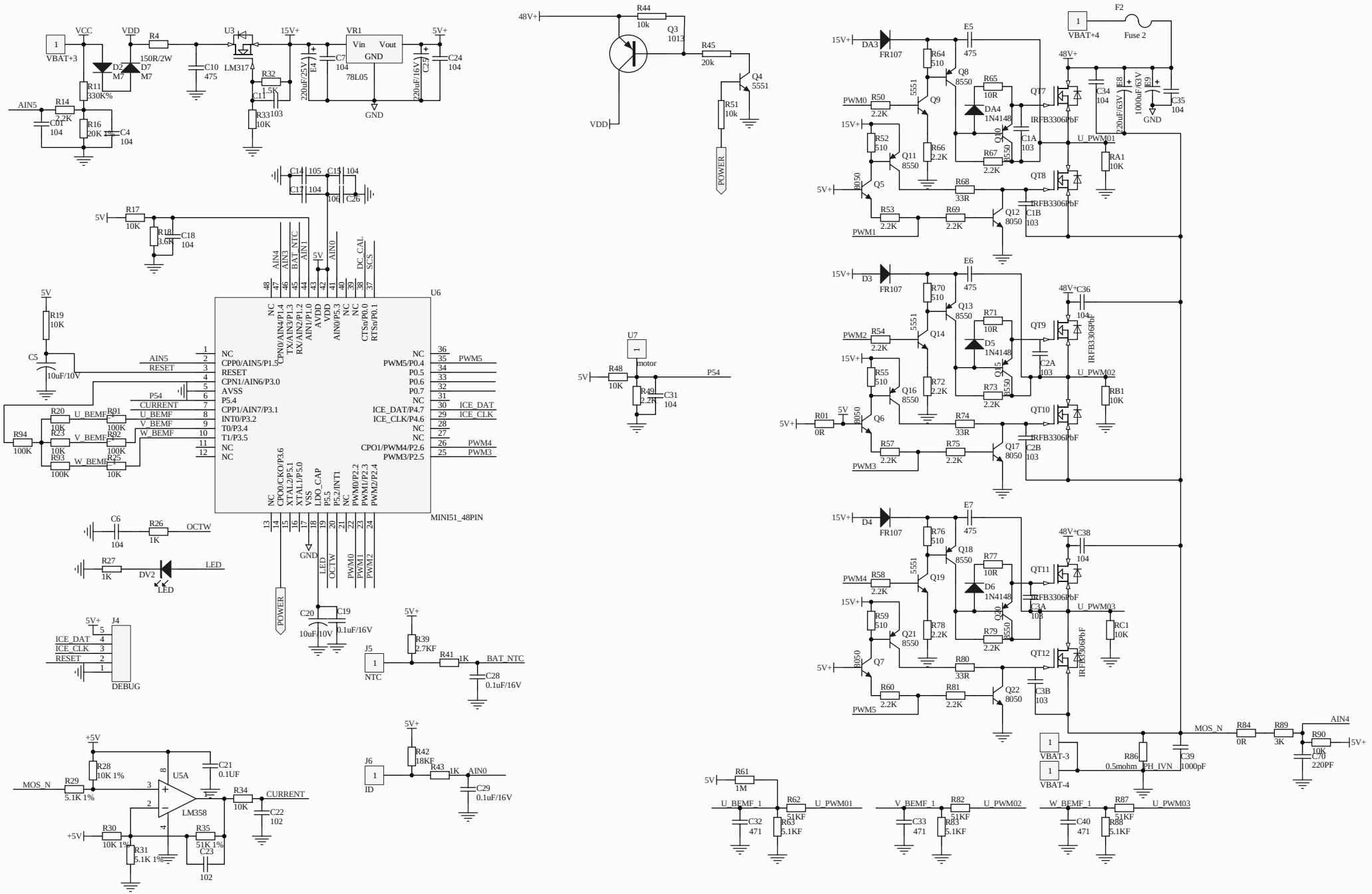

Title		
Size A3	Number	Revision
Date: 2015-3-16		Sheet of
File: C:\Documents and Settings\..\Backup of 割草机板图 Drawn By: 15.3.SCH		